Les industries Jessar industries inc.

HOME ACCESSORIES & DECORATIVE ACCENTS

ACCESSOIRES POUR LA MAISON ET ACCENTS DÉCORATIFS

TABLE OF CONTENTS / TABLE DES MATIÈRES

BASKETS / PANIERS

Page 4 - 17

OTTOMANS

Page 18 - 29

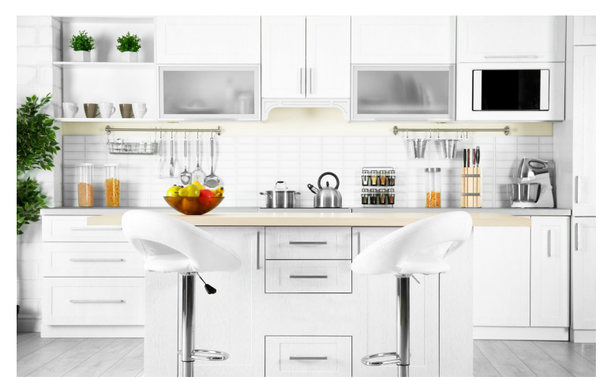

BAR STOOL / TABOURET BAR

Page 30 - 38

BASKETS / PANIERS

6-00048

Felt storage basket / Panier de rangement en feutre
(33.5 cm x 25 cm x 28 cm) MEDIUM / MOYEN
Inner QTY: 0 Master QTY: 6

6-00049

Felt storage basket / Panier de rangement en feutre
(29.5 cm x 20.5 cm x 25 cm) SMALL / PETIT
Inner QTY: 0 Master QTY: 6

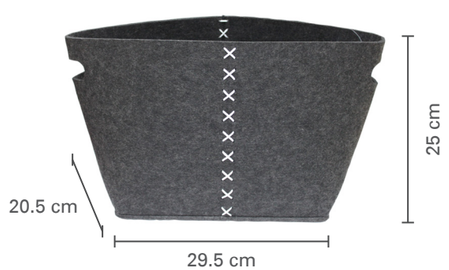

6-00445

Laundry hamper / Panier à linge
(30 cm x 40 cm x 55 cm)
Inner QTY: 0 Master QTY: 6

6-00440

Storage basket / Panier de rangement
(19 cm x 14 cm x 9 cm)
Inner QTY: 0 Master QTY: 12

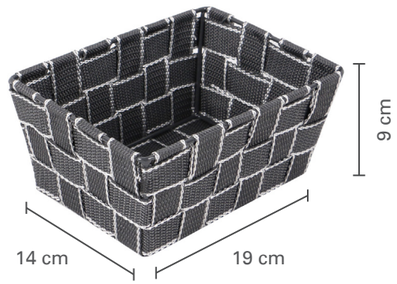

6-00441

Storage basket / Panier de rangement
(30 cm x 18 cm x 11.5 cm)
Inner QTY: 0 Master QTY: 12

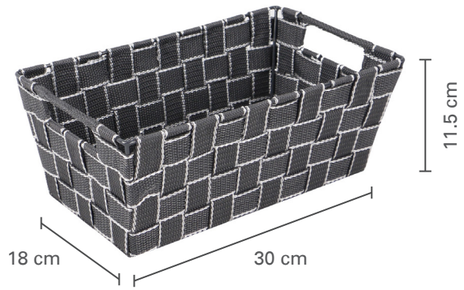

6-00442

Storage basket / Panier de rangement
(30 cm x 20 cm x 15 cm)
Inner QTY: 0 Master QTY: 12

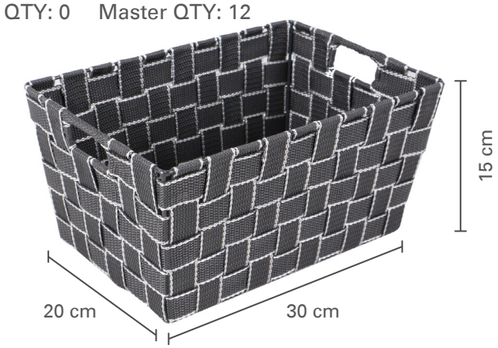

6-00443

Storage basket / Panier de rangement
(35.5 cm x 25 cm x 22 cm)
Inner QTY: 0 Master QTY: 8

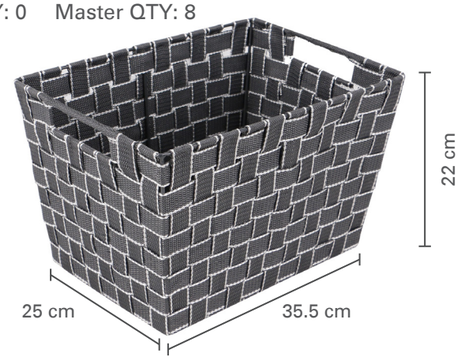

6-00490

Laundry hamper / Panier à linge
(30 cm x 40 cm x 55 cm)

Inner QTY: 0 Master QTY: 6

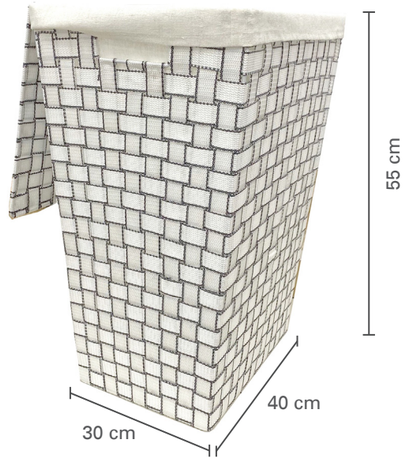

6-00486

Storage basket / Panier de rangement
(19 cm x 14 cm x 9 cm)

Inner QTY: 0 Master QTY: 12

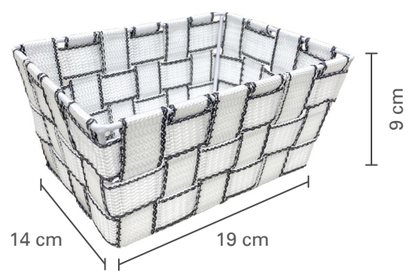

6-00487

Storage basket / Panier de rangement
(30 cm x 18 cm x 11.5 cm)

Inner QTY: 0 Master QTY: 12

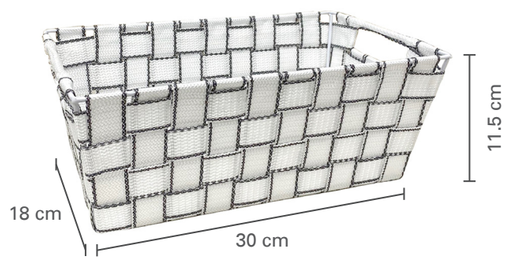

6-00488

Storage basket / Panier de rangement
(30 cm x 20 cm x 15 cm)

Inner QTY: 0 Master QTY: 12

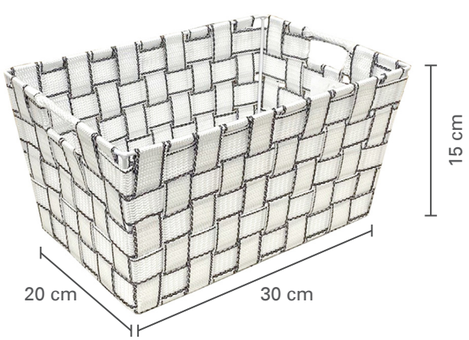

6-00489

Storage basket / Panier de rangement
(35 cm x 25 cm x 22 cm)

Inner QTY: 0 Master QTY: 8

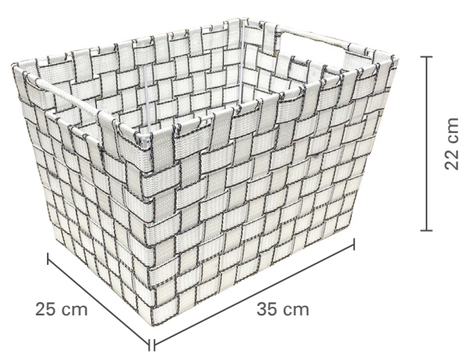

6-00474

Storage basket / Panier de rangement

L: 32 cm x 22 cm x 15 cm
M: 28 cm x 18 cm x 13 cm
S: 24 cm x 14 cm x 11 cm

Inner QTY: 0 Master QTY: 6

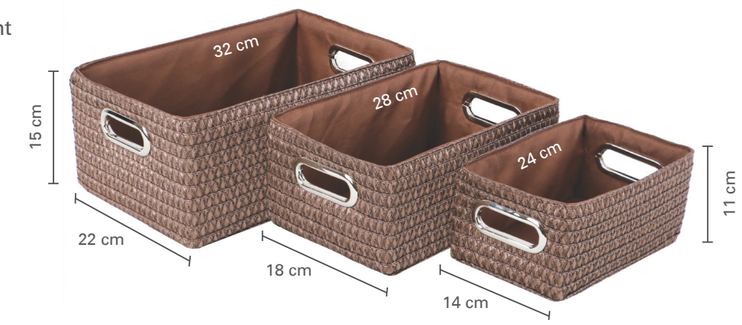

6-00470

Storage basket / Panier de rangement

L: 32 cm x 22 cm x 15 cm
M: 28 cm x 18 cm x 13 cm
S: 24 cm x 14 cm x 11 cm

Inner QTY: 0 Master QTY: 6

6-00455

Storage basket / Panier de rangement

L: 28.5 cm x 19 cm x 12.5 cm
M: 26.5 cm x 17 cm x 11.5 cm
S: 24.5 cm x 15 cm x 10.5 cm

Inner QTY: 0 Master QTY: 6

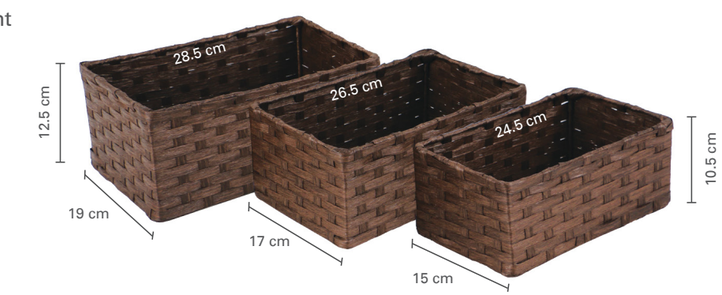

6-00459

Storage basket / Panier de rangement

L: 28.5 cm x 19 cm x 12.5 cm
M: 26.5 cm x 17 cm x 11.5 cm
S: 24.5 cm x 15 cm x 10.5 cm

Inner QTY: 0 Master QTY: 6

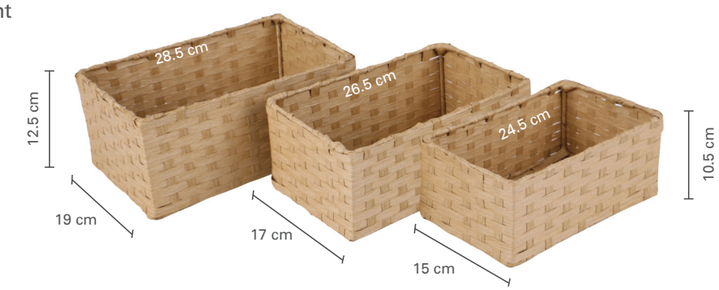

6-00450

Storage basket / Panier de rangement
(38 cm x 26 cm x 13 cm)

Inner QTY: 0 Master QTY: 12

6-00449

Storage basket / Panier de rangement
(38 cm x 26 cm x 13 cm)

Inner QTY: 0 Master QTY: 12

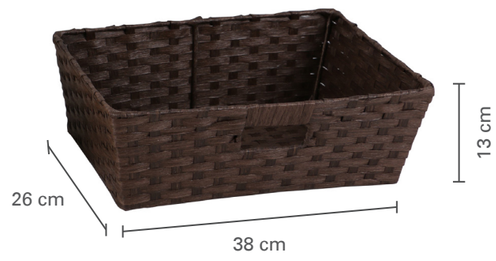

6-00452

Storage basket / Panier de rangement
(30 cm x 18 cm x 12 cm)

Inner QTY: 0 Master QTY: 12

6-00451

Storage basket / Panier de rangement
(30 cm x 18 cm x 12 cm)

Inner QTY: 0 Master QTY: 12

6-00454

Storage basket / Panier de rangement
(24 cm x 15 cm x 7.5 cm)

Inner QTY: 0 Master QTY: 12

6-00453

Storage basket / Panier de rangement
(24 cm x 15 cm x 7.5 cm)

Inner QTY: 0 Master QTY: 12

6-00463

Storage basket / Panier de rangement
L: 28 cm x 28 cm x 10 cm / M: 26 cm x 13 cm x 9 cm
S: 13 cm x 13 cm x 9 cm (2 pcs)

Inner QTY: 0 Master QTY: 6

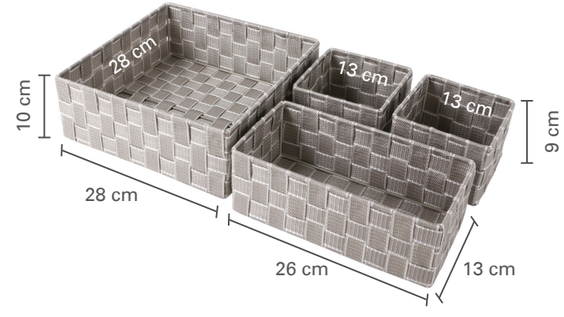

6-00467

Storage basket / Panier de rangement
L: 28 cm x 19 cm x 11 cm
S: 17 cm x 13 cm x 8.5 cm (2 pcs)

Inner QTY: 0 Master QTY: 6

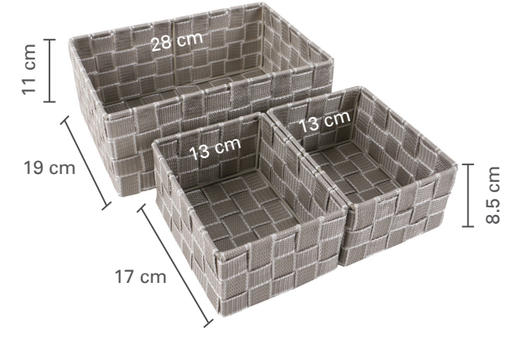

6-00481

Storage basket / Panier de rangement
L: 34.5 cm x 24 cm x 13.5 cm
S: 21 cm x 15.5 cm x 12.5 cm (2 pcs)

Inner QTY: 0 Master QTY: 6

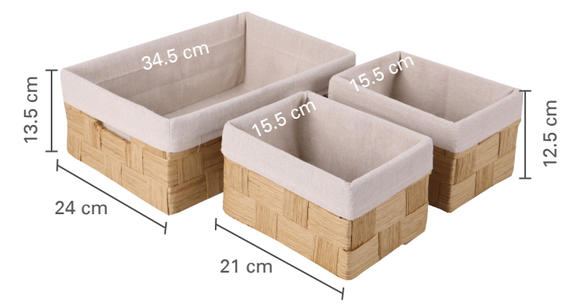

6-00276

Braided basket set of 3 pcs
Panier tressé de 3 pcs
(L: 35 x 25 x 13 cm / S: 22 x 16 x 11 cm)

Inner QTY: 0 Master QTY: 6

6-00280

Braided basket set of 3 pcs
Panier tressé de 3 pcs
(L: 35 x 25 x 13 cm / S: 22 x 16 x 11 cm)

Inner QTY: 0 Master QTY: 6

6-00491

Fabric foldable basket set of 3 pcs
Panier en tissu pliable de 3 pcs
(L: 24x18x14 cm / M: 20x16x12 cm / S: 17x14x10 cm)

Inner QTY: 0 Master QTY: 12

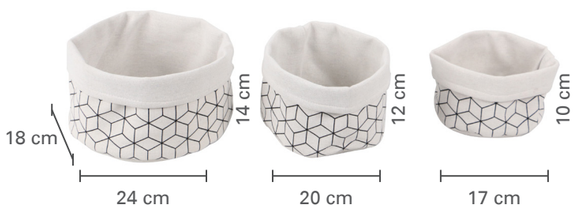

6-00495

Fabric foldable basket set of 3 pcs
Panier en tissu pliable de 3 pcs
(L: 24x18x14 cm / M: 20x16x12 cm / S: 17x14x10 cm)

Inner QTY: 0 Master QTY: 12

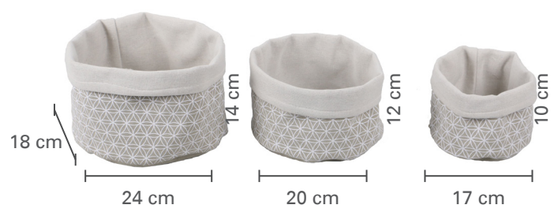

6-00283

Fabric foldable basket set of 3 pcs
Panier en tissu pliable de 3 pcs
(L: 24x18x14 cm / M: 20x16x12 cm / S: 17x14x10 cm)

Inner QTY: 0 Master QTY: 12

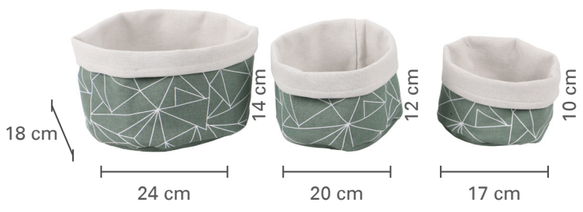

6-00291

Cotton storage basket set of 3 pcs
Panier de rangement en coton de 3 pcs
(L: 34 x 28 cm / M: 30 x 25 cm / S: 25 x 24 cm)

Inner QTY: 0 Master QTY: 4

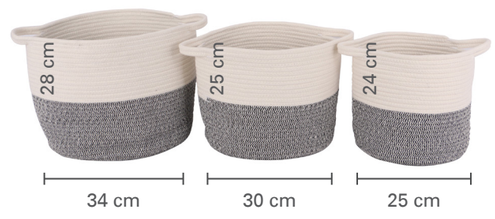

6-00484

Felt animal toy basket
Panier de jouets d'animeaux en feutre
(35 cm x 16 cm)

Inner QTY: 0 Master QTY: 6

6-00485

Felt animal toy basket
Panier de jouets d'animeaux en feutre
(35 cm x 16 cm)

Inner QTY: 0 Master QTY: 6

6-00287

Pet bed with cushion set of 3 pcs
Lit d'animal domestique avec coussin de 3 pcs

L : 83 cm x 51 cm x 10 up to 21 cm
M: 58 cm x 46 cm x 8.5 up to 19 cm
S: 54 cm x 40 cm x 8 up to 17.5 cm)

Inner QTY: 0 Master QTY: 1

6-00095

Laundry basket white (24L) / Panier a linge blanc (24)
(40 cm x 52 cm x 24 cm)

Inner QTY: 0 Master QTY: 6

6-00093

Laundry basket white (35L) / Panier a linge blanc (35L)
(45 cm x 37 cm x 26 cm)

Inner QTY: 0 Master QTY: 6

6-00094

Laundry basket white (32L) / Panier a linge blanc (32L)
(47 cm x 34.5 cm)

Inner QTY: 0 Master QTY: 6

6-00089

Laundry hamper (52L) / Panier à linge (52L)
(36 cm x 40 cm x 60 cm)

Inner QTY: 0 Master QTY: 6

6-00446

Laundry hamper / Panier à linge
(36 cm x 28 cm x 56 cm)

Inner QTY: 0 Master QTY: 6

6-00447

Laundry hamper / Panier à linge
(52 cm x 60 cm)

Inner QTY: 0 Master QTY: 6

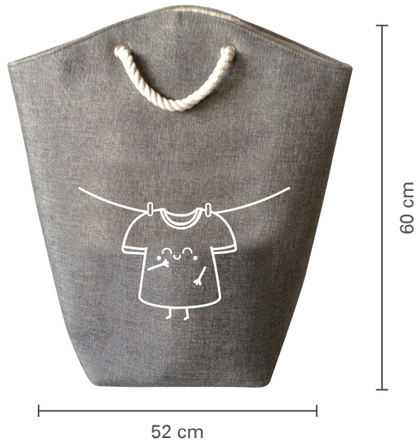

6-00053

Felt hamper / Panier à linge en feutre
(38.5 cm x 64 cm)

Inner QTY: 0 Master QTY: 6

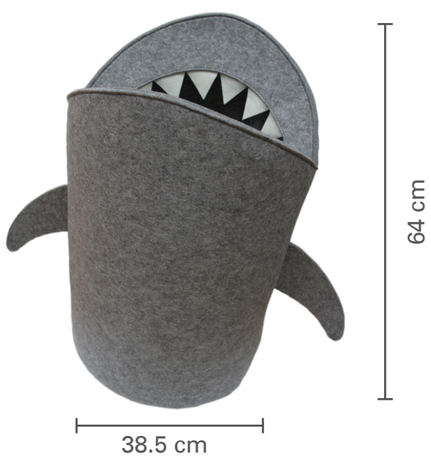

6-01553

Square ottoman (Blue, Gold leg)
Pouf carré (Bleu, pattes en or)

(40 cm x 40 cm x 44 cm) ANDREA COLLECTION

Inner QTY: 0 Master QTY: 1

6-01554

Rond ottoman (Grey, Silver leg)
Pouf rond (Gris, pattes argent)

(36.5 cm x 36.5 cm x 44 cm) BOLERO COLLECTION

Inner QTY: 0 Master QTY: 1

6-01555

Square ottoman (Pink, Gold leg)
Pouf carré (Rose, pattes or)

(34.5 cm x 34.5 cm x 48 cm) BROOKE COLLECTION

Inner QTY: 0 Master QTY: 1

6-01555

Square ottoman (Green, gold leg)
Pouf carré (Vert, pattes or)

(38.5 cm x 38.5 cm x 43 cm) DELANO COLLECTION

Inner QTY: 0 Master QTY: 1

6-01516

Cube ottoman - Black / Ottoman cube - Noir
(38 cm x 38 cm x 38 cm) AUSTIN COLLECTION

Inner QTY: 0 Master QTY: 4

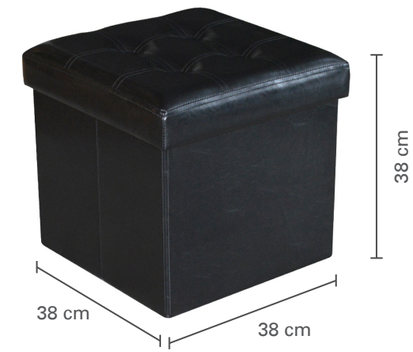

6-01517

Cube ottoman - White / Ottoman cube - Blanc
(38 cm x 38 cm x 38 cm) AUSTIN COLLECTION

Inner QTY: 0 Master QTY: 4

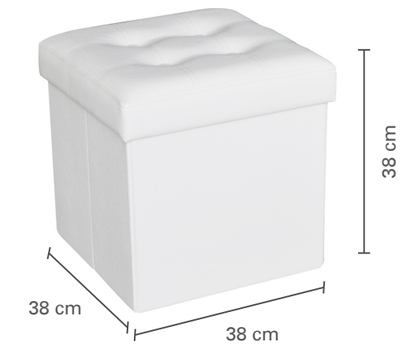

6-01518

Cube ottoman - Red / Ottoman cube - Rouge
(38 cm x 38 cm x 38 cm) AUSTIN COLLECTION

Inner QTY: 0 Master QTY: 4

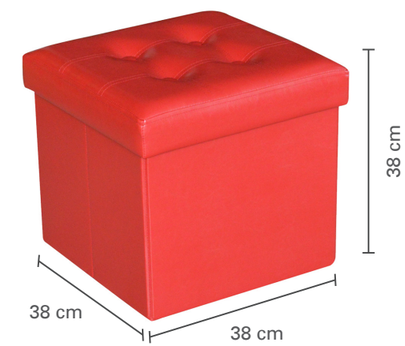

6-01532

Cube ottoman - Black / Ottoman cube - Noir
(38 cm x 38 cm x 37.5 cm) MADDOX COLLECTION
Inner QTY: 0 Master QTY: 4

6-01519

Cube ottoman (Velvet- Beige)
Ottoman cube (Velour - Beige)
(38 cm x 38 cm x 38 cm) GLORIA COLLECTION
Inner QTY: 0 Master QTY: 4

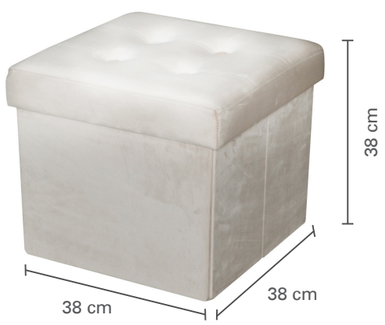

6-01520

Cube ottoman (Velvet- Gray)
Ottoman cube (Velour - Gris)
(38 cm x 38 cm x 38 cm) GLORIA COLLECTION
Inner QTY: 0 Master QTY: 4

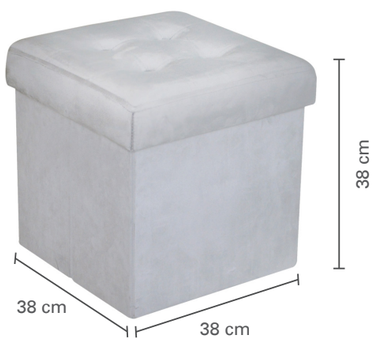

6-01547

Cube ottoman - Black / Ottoman cube - Noir
(45.5 cm x 45.5 cm x 45.5 cm) CODI COLLECTION
Inner QTY: 0 Master QTY: 1

6-01548

Cube ottoman - Gray / Ottoman cube - Gris
(45.5 cm x 45.5 cm x 45.5 cm) CODI COLLECTION
Inner QTY: 0 Master QTY: 1

6-01549

Cube ottoman - Blue / Ottoman cube - Bleu
(45.5 cm x 45.5 cm x 45.5 cm) CODI COLLECTION
Inner QTY: 0 Master QTY: 1

6-01550

Rectangular ottoman - Black / Ottoman rectang. - Noir
(91.5 cm x 46.5 cm x 46.5 cm) CODI COLLECTION

Inner QTY: 0 Master QTY: 1

6-01551

Rectangular ottoman - Gray / Ottoman rectang. - Gris
(91.5 cm x 46.5 cm x 46.5 cm) CODI COLLECTION

Inner QTY: 0 Master QTY: 1

6-01552

Rectangular ottoman - Blue / Ottoman rectang. - Bleu
(91.5 cm x 46.5 cm x 46.5 cm) CODI COLLECTION

Inner QTY: 0 Master QTY: 1

ACADIA Collection

6-01521

Rectangular storage ottoman - Black
Ottoman de rangement rectangulaire - Noir
(76.5 cm x 38 cm x 38 cm) ACADIA COLLECTION

Inner QTY: 0 Master QTY: 2

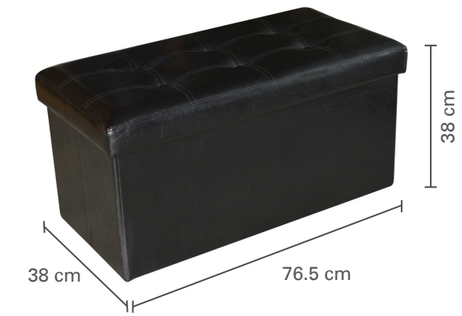

6-01522

Rectangular storage ottoman - White
Ottoman de rangement rectangulaire - Blanc
(76.5 cm x 38 cm x 38 cm) ACADIA COLLECTION

Inner QTY: 0 Master QTY: 2

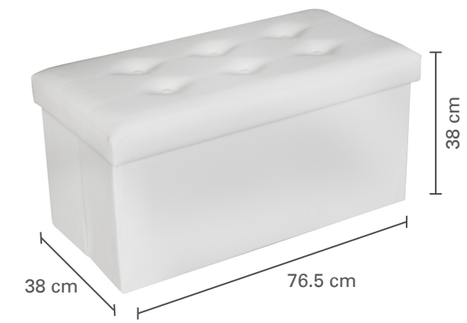

6-01523

Rectangular storage ottoman - Red
Ottoman de rangement rectangulaire - Rouge
(76.5 cm x 38 cm x 38 cm) ACADIA COLLECTION

Inner QTY: 0 Master QTY: 2

6-01526

Rectangular storage ottoman - Black
Ottoman de rangement rectangulaire - Noir
(76.5 cm x 38 cm x 38 cm) ACADIA COLLECTION

Inner QTY: 0 Master QTY: 1

6-01525

Round ottoman - Pink (2 pcs) /
Ottoman rond - Rose (2 pcs)

LOUNGE COLLECTION

Inner QTY: 0 Master QTY: 1

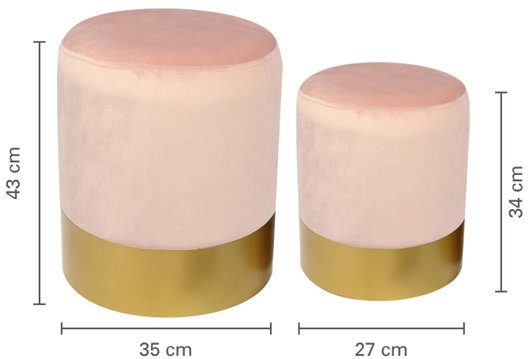

6-01535

Round ottoman - Gray / Ottoman rond - Gris

LAURENCE COLLECTION

Inner QTY: 0 Master QTY: 1

6-01533

Round ottoman - Gray (2 pcs) / Ottoman rond - Gris (2 pcs)

BARON COLLECTION

Inner QTY: 0 Master QTY: 1

6-01534

Round ottoman - Beige (2 pcs) / Ottoman rond - Beige (2 pcs)

BARON COLLECTION

Inner QTY: 0 Master QTY: 1

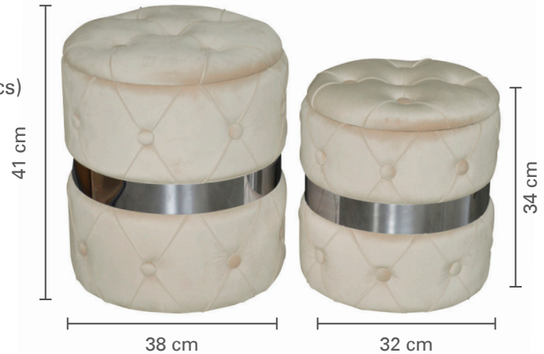

DOROTHY Collection

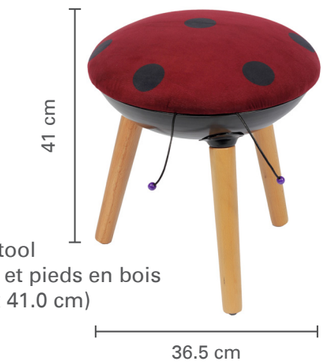

6-01536

Velvet & wood leg stool
Tabouret en velours et pieds en bois
(36.5 cm x 36.5 cm x 41.0 cm)

DOROTHY COLLECTION

Inner QTY: 0 Master QTY: 1

DIEGO Collection

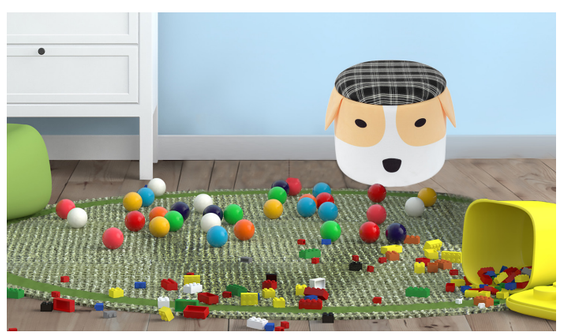

6-01537

Stool with storage
Tabouret avec rangement
(40.0 cm x 40.0 cm x 35.5 cm)

DIEGO COLLECTION

Inner QTY: 0 Master QTY: 1

DO RE MI Collection

6-01538

Storage ottoman
Ottoman avec rangement
(48.0 cm x 32.0 cm x 31.5 cm)

DO RE MI COLLECTION

Inner QTY: 0 Master QTY: 4

MIMO Collection

6-01539

Storage ottoman
Ottoman avec rangement
(38.0 cm x 25.0 cm x 24.5 cm)

MIMO COLLECTION

Inner QTY: 0 Master QTY: 4

LOVE Collection

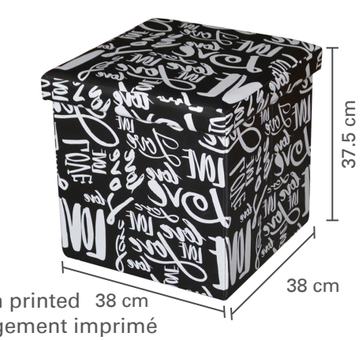

6-01540

Storage ottoman printed
Ottoman de rangement imprimé
(38.0 cm x 38.0 cm x 37.5 cm)

LOVE COLLECTION

Inner QTY: 0 Master QTY: 4

DAVIS Collection

6-01545

DAVIS COLLECTION

Bar stool - Black (Adjustable height & swivel)

Tabouret bar - Noir (Hauteur ajustable et pivotant)

Inner QTY: 0 Master QTY: 2

6-01546

DAVIS COLLECTION

Bar stool - White (Adjustable height & swivel)

Tabouret bar - Blanc (Hauteur ajustable et pivotant)

Inner QTY: 0 Master QTY: 2

UPPER Collection

6-01527

UPPER COLLECTION

Bar stool - Gray
(Adjustable height & swivel)

Tabouret bar - Gris
(Hauteur ajustable et pivotant)

Inner QTY: 0 Master QTY: 2

6-01528

UPPER COLLECTION

Bar stool - Brown
(Adjustable height & swivel)

Tabouret bar - Brun
(Hauteur ajustable et pivotant)

Inner QTY: 0 Master QTY: 2

6-01504

UPPER COLLECTION

Bar stool - White
(Adjustable height & swivel)

Tabouret bar - Blanc
(Hauteur ajustable et pivotant)

Inner QTY: 0 Master QTY: 2

6-01505

UPPER COLLECTION

Bar stool - Black
(Adjustable height & swivel)

Tabouret bar - Noir
(Hauteur ajustable et pivotant)

Inner QTY: 0 Master QTY: 2

6-01506

UPPER COLLECTION

Bar stool - Red
(Adjustable height & swivel)

Tabouret bar - Rouge
(Hauteur ajustable et pivotant)

Inner QTY: 0 Master QTY: 2

6-01507

FLEX COLLECTION

Bar stool - White
(Adjustable height & swivel)

Tabouret bar - Blanc
(Hauteur ajustable et pivotant)

Inner QTY: 0 Master QTY: 2

6-01508

FLEX COLLECTION

Bar stool - Black
(Adjustable height & swivel)

Tabouret bar - Noir
(Hauteur ajustable et pivotant)

Inner QTY: 0 Master QTY: 2

6-01509

FLEX COLLECTION

Bar stool - Red
(Adjustable height & swivel)

Tabouret bar - Rouge
(Hauteur ajustable et pivotant)

Inner QTY: 0 Master QTY: 2

6-01510

GLAMOUR COLLECTION

Bar stool - White
(Adjustable height & swivel)

Tabouret bar - Blanc
(Hauteur ajustable et pivotant)

Inner QTY: 0 Master QTY: 2

6-01511

GLAMOUR COLLECTION

Bar stool - Black
(Adjustable height & swivel)

Tabouret bar - Noir
(Hauteur ajustable et pivotant)

Inner QTY: 0 Master QTY: 2

6-01512

GLAMOUR COLLECTION

Bar stool - Red
(Adjustable height & swivel)

Tabouret bar - Rouge
(Hauteur ajustable et pivotant)

Inner QTY: 0 Master QTY: 2

FIXER Collection

6-01514

FIXER COLLECTION

Bar stool - Black
(Adjustable height & swivel)

Tabouret bar - Noir
(Hauteur ajustable et pivotant)

Inner QTY: 0 Master QTY: 2

6-01513

FIXER COLLECTION

Bar stool - White
(Adjustable height & swivel)

Tabouret bar - Blanc
(Hauteur ajustable et pivotant)

Inner QTY: 0 Master QTY: 2

6-01529

FIXER COLLECTION

Bar stool - Gray
(Adjustable height & swivel)

Tabouret bar - Gris
(Hauteur ajustable et pivotant)

Inner QTY: 0 Master QTY: 2

6-01530

FIXER COLLECTION

Bar stool - Brown
(Adjustable height & swivel)

Tabouret bar - Brun
(Hauteur ajustable et pivotant)

Inner QTY: 0 Master QTY: 2

6-01541

RIVOLI COLLECTION

Bar stool - Black
(Adjustable height & swivel)

Tabouret bar - Noir
(Hauteur ajustable et pivotant)

Inner QTY: 0 Master QTY: 2

6-01542

RIVOLI COLLECTION

Bar stool - Blue
(Adjustable height & swivel)

Tabouret bar - Bleu
(Hauteur ajustable et pivotant)

Inner QTY: 0 Master QTY: 2

6-01543

CALIFORNIA COLLECTION

Bar stool - Gray
(Adjustable height & swivel)

Tabouret bar - Gris
(Hauteur ajustable et pivotant)

Inner QTY: 0 Master QTY: 2

6-01544

CALIFORNIA COLLECTION

Bar stool - Brown
(Adjustable height & swivel)

Tabouret bar - Brun
(Hauteur ajustable et pivotant)

Inner QTY: 0 Master QTY: 2

6-01557

GORDON COLLECTION

Bar stool - Black & Brown (Adjustable height & swivel)
Tabouret bar - Noir et brun (Hauteur ajustable et pivotant)

Inner QTY: 0 Master QTY: 2

6-01558

GRAHAM COLLECTION

Bar stool - Black & Brown
Tabouret bar - Noir et brun

Inner QTY: 0 Master QTY: 4

6-01559

BALTIMORE COLLECTION

Bar stool - Black
Tabouret bar - Noir

Inner QTY: 0 Master QTY: 4

6-01560

BRUCE COLLECTION

Bar stool - Black (Adjustable height & swivel)
Tabouret bar - Noir (Hauteur ajustable et pivotant)

Inner QTY: 0 Master QTY: 2

HOME ACCESSORIES & DECORATIVE ACCENTS

ACCESSOIRES POUR LA MAISON ET ACCENTS DÉCORATIFS

Les industries Jessar industries inc.

341 Allée Du Golf
St-Eustache, Québec
Canada J7R 0L5

Tel : 450 472 0280
Fax: 450 472 1280

E-mail: info@jessar.ca
www.jessar.ca

Feb 2023